Acme Sanitary Ware Co. Ltd.
1/F, Acme Building, 22-28 Nanking Street, Kowloon, Hong Kong
Tel: 2388 7171 Fax: 2710 8012
Email: acme@acmesanitary.com.hk
Website: www.acmesanitary.com.hk
Since 1949

PROJECT		REF		REV	ITEM CODE	
LOCATION		DATE			PAGE	

SANITARY WARE SPECIFICATION SHEET

Item Descriptions	Bobrick (USA) Surface-mounted automatic hand dryer, 220-240V
Dimensions	L275 x W130 x H280 mm
Model	B-710E
Material/ Color	ABS/ Grey
Manufacturer	Bobrick Washroom Equipment Inc. (USA)
Supplier	Acme Sanitary Ware Co. Ltd Mr. Eric Wong/ Mr. Don Yuen
Contact Tel/Fax E-mail Website	(852) 2388-7171 / (852) 2710-8012 acme@acmesanitary.com.hk www.acmesanitary.com.hk

MATERIALS:

Cover — One-piece, 3/32" (2.6mm) thick fi re-retardant, molded , high-quality, high-impact, pale grey (Bobrick color #889) ABS plastic, 5-V rated. Cover is secured to mounting base with three fl at-head stainless steel screws.

Mounting Base and Fan Housing — 5-64" (2.0mm) thick fi re-retardant molded grey plastic with high-gloss fi nish. Air-inlet grille fi ts into bottom of mounting base. Air-outlet grille is secured between fan housing and mounting base.

Motor — 115V AC, 90 W, 60 Hz, 2500 rpm. Brushless, external rotor motor. Sealed ball bearings at both ends of drive shaft; maintenance free. Equipped with an automatic thermal-overload switch.

Fan — Dynamically balanced 5-15/64" (133mm) diameter centrifugal fan with multiple metallic vanes. Directs air fl ow from heating element at 90 cfm, mixes air to provide uniform temperature.

Heating Element — Coiled nickel-chrome heating element is protected by an automatic thermal-overload switch. Heating element, which is located on inlet side of fan, heats air without hot spots — inaccessible to vandals.

Electronic Control — Infrared sensor automatically turns dr yer on when hands are held under air-outlet opening and across path of sensor. Remove hands from path of sensor and dr yer stops. Electronic sensor has automatic shutoff approximately two minutes after dr yer turns on if an inanimate object, such as tape or chewing gum, is placed across sensor lens. After inanimate object is removed, electronic sensor automatically resets itself and dr yer operates normally.

Illustration/ Drawing

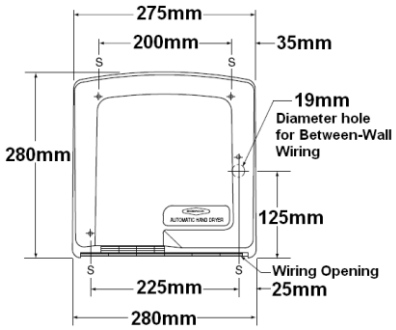

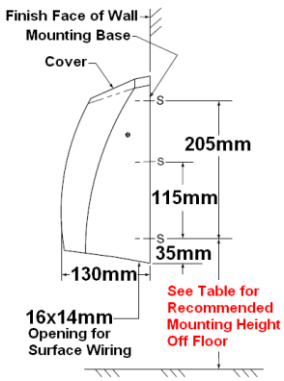

*RECOMMENDED MOUNTING HEIGHTS

Children's Washrooms, ages 3-4	36"	(915mm)
Children's Washrooms, ages 5-8	40"	(1015mm)
Children's Washrooms, ages 9-12	44"	(1120mm)
Universal Design	48"	(1219mm)

*Bottom screw hole of mounting base to finish face of floor

Note:

** All information of the above is for the reference only. No prior notice is made if any changes.*

Source: Bobrick Washroom Equipmen